CONTRACTOR:	PLAN No.	E065-06
Homeplace Structures 301 Commerce Drive Suite 400 New Holland, PA 17557	Wall Framing	
	PROJECT:	PAGE: 4 of 13
	10'x20' Studio Guesthouse	
DATE: March 22, 2006		

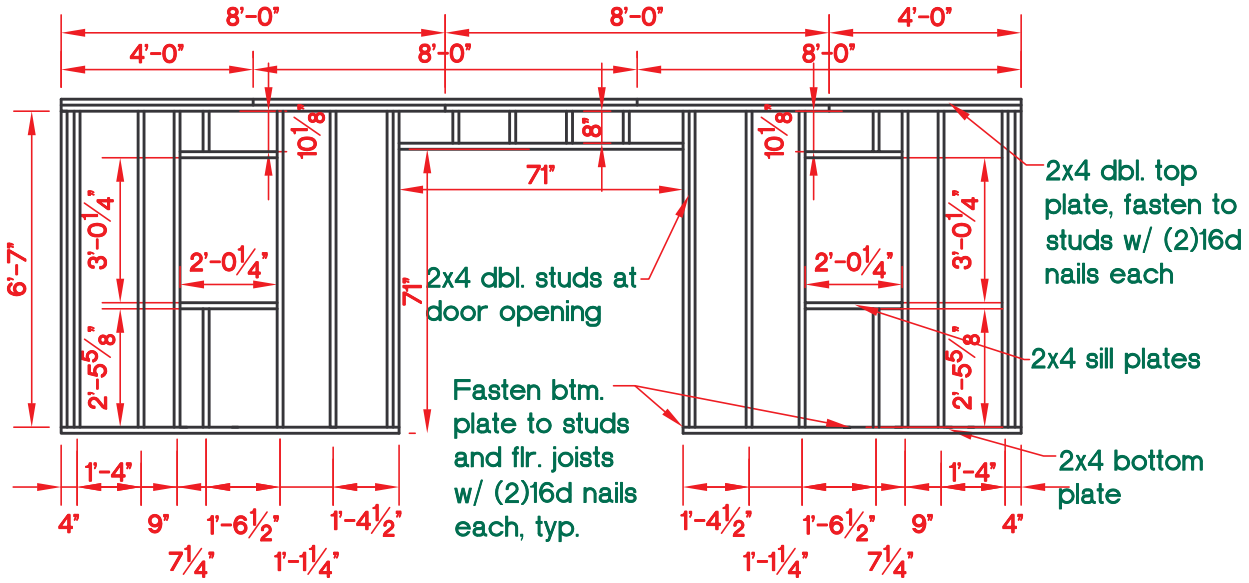

Wall Framing

Scale 1/4" = 1'-0"

(Front wall)

Revised on July 11, 2006